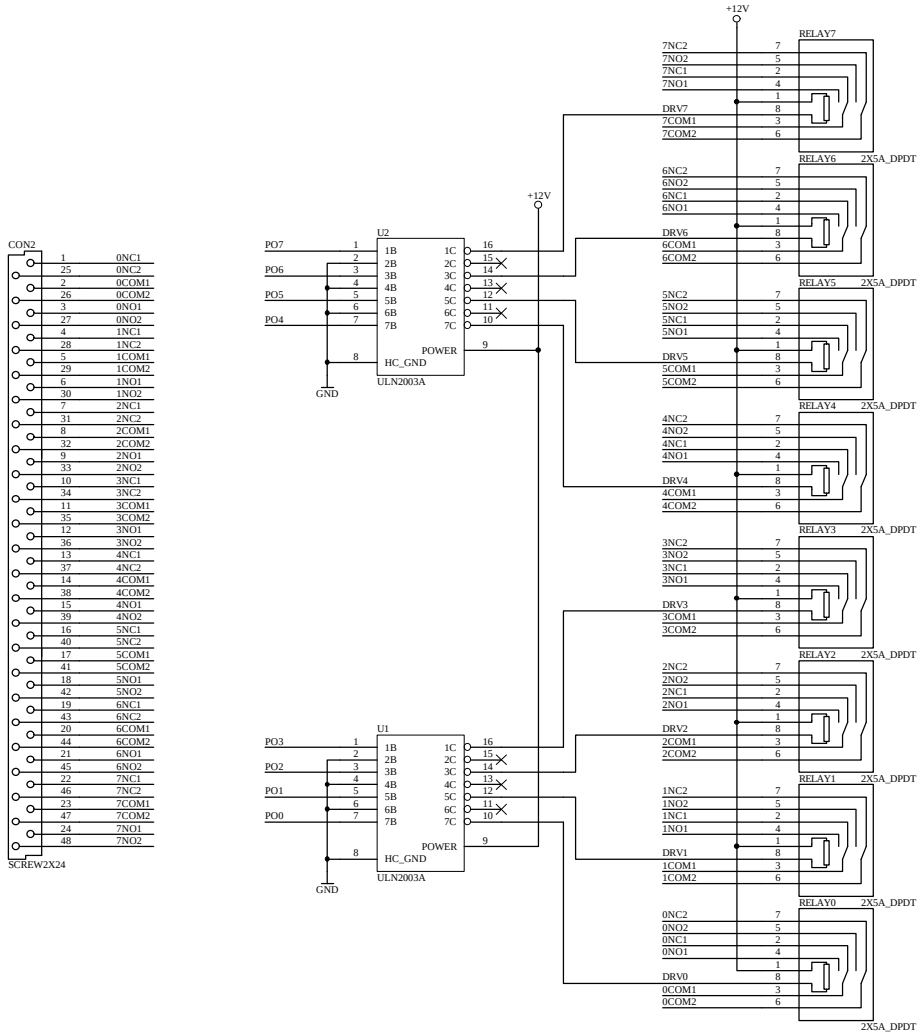

EXTERNAL SUPPLY CONNECTOR

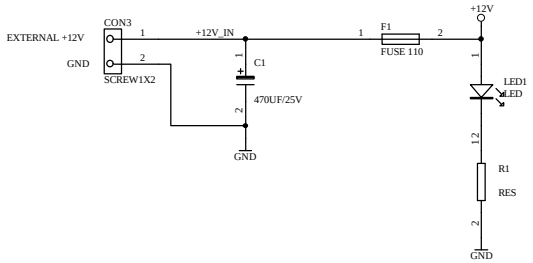

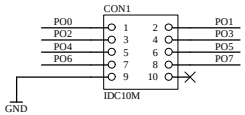

Title		
Size B	Number	Revision
Date: 5-Feb-2001		Sheet of
File: E:\PCB DESIGNS\Designs\38G\38g.sch		Drawn By: