TiePie engineering Handyscope HS5 arbitrary function generator offers the lowest THD in its class.

TiePie engineering's exclusive Constant Data Size (CDS) technology enables generating true form (point-by-point) arbitrary waveforms with exceptionally low jitter and high fidelity.

CDS has many advantages over its predecessor, the well known DDS system. CDS technology is now applied to the Handyscope HS5 True form Arbitrary Waveform Generator, making it a function generator with great flexibility and unparalleled performance, at the price of a common DDS function generator. This article shows the exceptional qualities of CDS compared to DDS.

TiePie engineering CDS explained

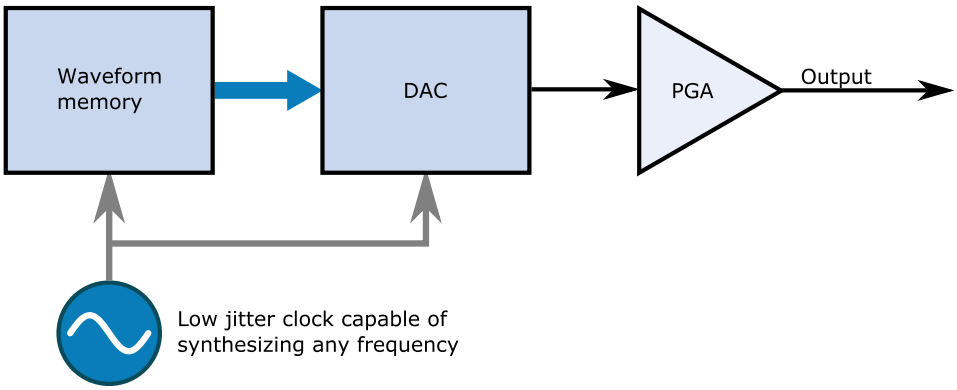

Figure 1: *TiePie engineering CDS technology block diagram*

TiePie engineering's CDS technology internally uses a low-jitter temperature compensated clock, capable of synthesizing any frequency, to linearly drive data from the waveform memory to a digital-to-analog converter (DAC) creating the analog signal. Because no memory values are skipped or repeated and each value is output for the same amount of time, the result is an optimal true form arbitrary waveform.

Advantages of TiePie engineering CDS compared to DDS

The CDS technology used in the Handyscope HS5 True form Arbitrary waveform generator is superior to traditional Direct Digital Synthesis (DDS) which has been applied in the recent decades. DDS has many drawbacks, such as high jitter when generating low frequency signals and a high Total Harmonic Distortion (THD). CDS eliminates these drawbacks and gives every engineer access to an True form Arbitrary waveform generator with characteristics previously unaffordable.

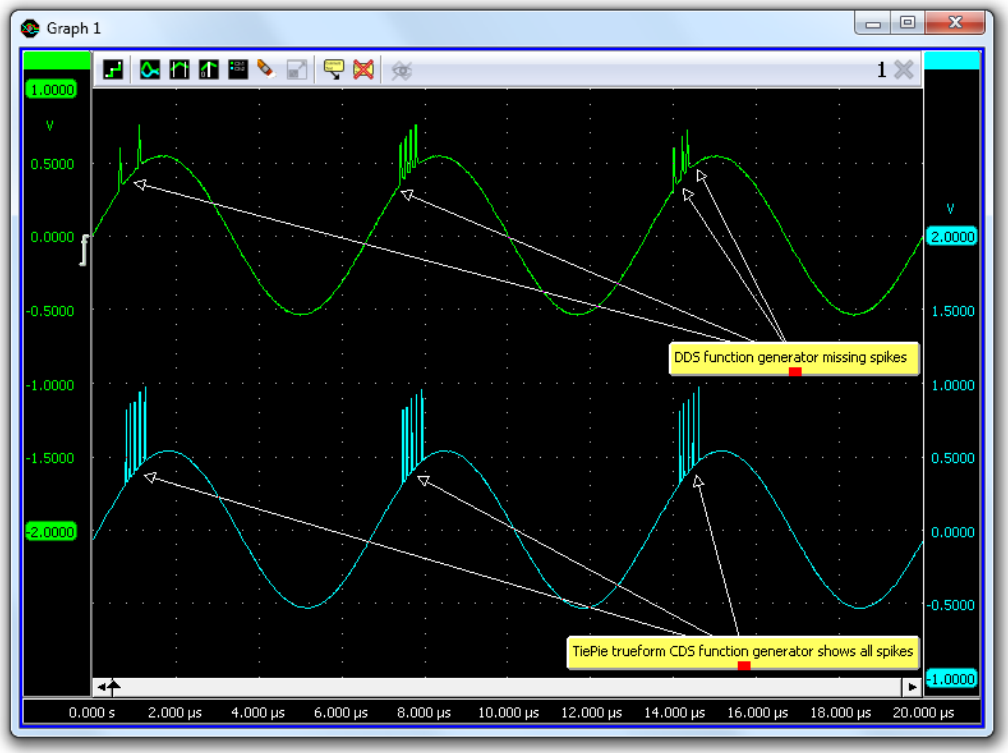

Figure 2: *A DDS Arbitrary Waveform Generator shows random missing spikes, while the CDS True form function generator consistently generates all spikes*

To illustrate the difference between DDS and CDS, figure 2 shows the same arbitrary waveform generated by a DDS function generator (Handyscope HS3) and by a Handyscope HS5 CDS function generator. The arbitrary signal consists of a period of a sine wave with 5 spikes superimposed. While the DDS function generator (green line) misses spikes at random, the revolutionary CDS function generator (blue line) consistently generates all spikes, since every point in waveform memory is used by the CDS technology. This shows that for correctly generating the true form of a signal, a CDS function generator is a must for every engineer. Another difference that can be observed, is the different spike amplitude. This is caused by the fact that the Handyscope HS5 CDS True form function generator has a much higher bandwidth than the DDS function generator.

The Handyscope HS5 CDS Arbitrary waveform generator outperforms any DDS function generator in many ways. Its jitter specification is 25 times better than a DDS function generator and generated CDS arbitrary waveforms have a higher fidelity. Refer to table 1 for a comparison of several properties of DDS and CDS function generators.

	a 20 MHz DDS	40 MHz Handyscope HS5-540 CDS	Improvement
Total Harmonic Distortion	>0.2 %	0.04 %	5 times better
Jitter	500 ps	20 ps	25 times better
Signal frequency range	200 kHz	40 MHz	200 times better
Memory size	128 K	64 M	512 times larger
Rise time	20 ns	8 ns	2.5 times better

Table 1: Advantages of a Handyscope HS5 True form Arbitrary waveform generator equipped with CDS technology.

The Handyscope HS5 CDS technology shares all performance advantages of DDS, while adding the following significant advantages:

- square waves and pulse waveforms have less jitter
- triangular waveform reproduction is more accurate and up to much higher frequencies
- arbitrary waveform reproduction is more accurate, as memory is read point by point
- signals can have any length from 8 points to 64 million points

- segmentation and sequencing are possible.

Since the Handyscope HS5 equipped with CDS technology uses every point in waveform memory and no points are skipped or repeated, arbitrary waveforms are reproduced much more accurately. This results in an extremely low Total Harmonic Distortion (THD) as illustrated in figure 3, which shows a spectrum of a generated 50 kHz sine wave.

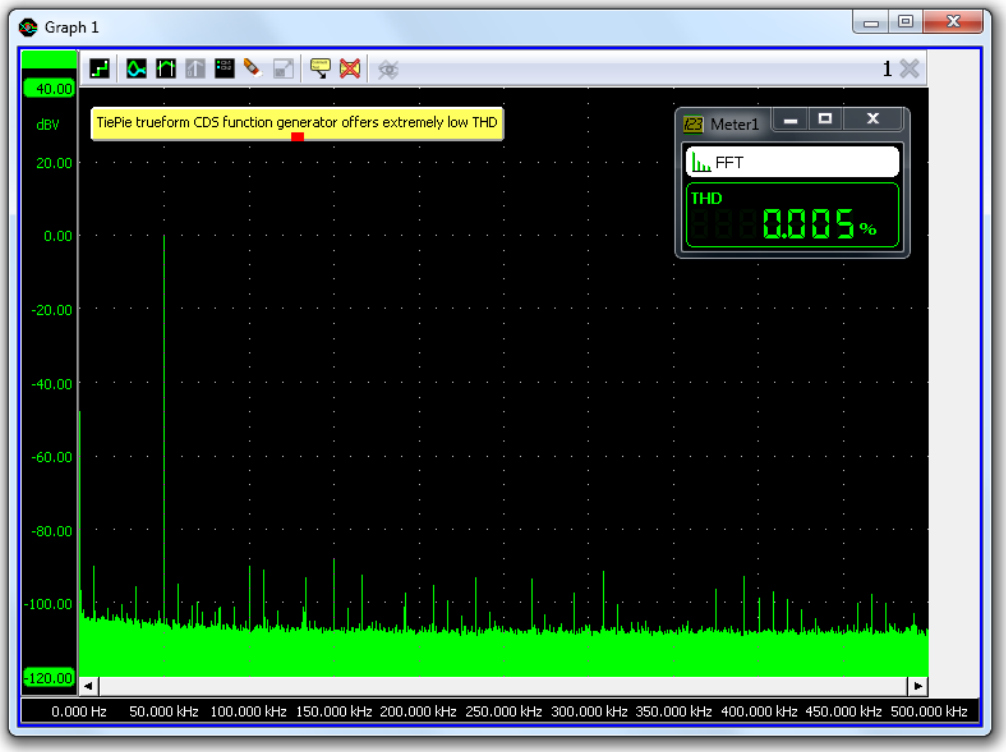

Figure 3: *TiePie engineering Handyscope HS5 offers the lowest THD in its class. A 50 kHz 0 dB sine shows a -90 dB second harmonic and third harmonic of -88 dB.*

Conclusion

The TiePie engineering CDS technology is superior to the old DDS which has some serious drawbacks with respect to jitter and distortion. Starting with the TiePie engineering Handyscope HS5 combining an oscilloscope and True form Arbitrary waveform generator, TiePie engineering is now using CDS technology to maintain all performance advantages of DDS while eliminating its disadvantages. Each point in waveform memory is used, and used only once, to produce a true form waveform, which means waveforms are reproduced with higher fidelity. Jitter and distortion are significantly reduced. Additional capabilities such as segmentation and sequencing are now possible. Being such an innovative and advanced technology, CDS gives the function/arbitrary waveform generator industry a new impulse for now and many years to come.

Read all about the Handyscope HS5 at www.tiepie.com/HS5

Egmont Instruments is official distributor of TiePie engineering test and measurement instruments and accessories.

Egmont Instruments
ul. Chlodna 39, pawilon 11
00-867 Warszawa
Poland
Tel.: +48 228506205
Fax: +48 226540248
E-mail: egmont@egmont.com.pl
www.egmont.com.pl

TiePie engineering
Koperslagersstraat 37
8601 WL Sneek
The Netherlands
Tel.: +31 515 415 416
Fax: +31 515 418 819
E-mail: sales@tiepie.nl
www.tiepie.com