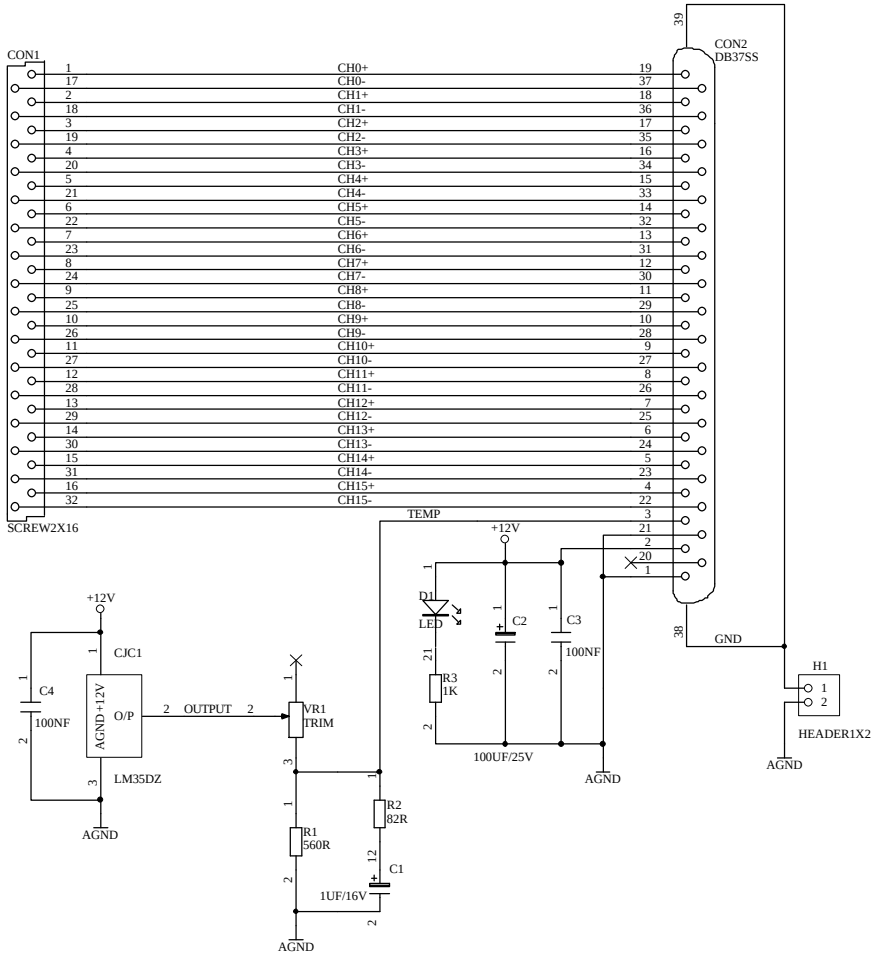

Title

PCI-773 (16 CHANNEL) Thermocouple Adapter

Size:Orcad B | Number: PCI-773-T.sch | Revision: 1A

File: G:\PCB DESIGNS\Designs\PCI-773-T\PCI-773-T.SCH Date: 15/5/2012 Time: 15:14:32 | Sheet 1 of 1

EAGLE TECHNOLOGY
11-15 HOUT STREET
CAPE TOWN
WESTERN PROVINCE
RSA -8001

Protel Technology