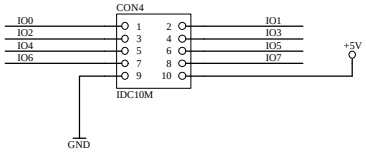


8X DIRECTION INDEPENDENT DIGITAL I/O
(IDC10M CONNECTOR)

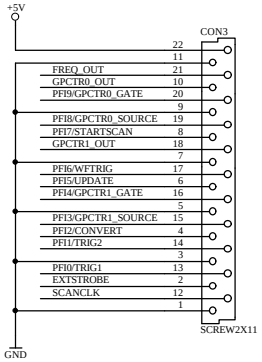


MULTIFUNCTION DIGITAL CONTROL I/O
(22WAY SCREW TERMINAL)

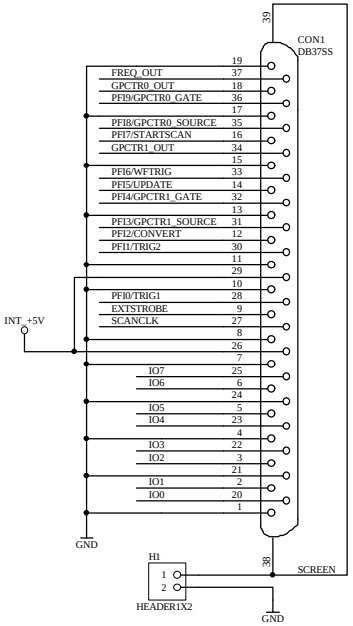


NATIONAL INSTRUMENTS DIGITAL I/O
(37WAY SCREENED CABLE)

EXTERNAL SUPPLY CONNECTOR

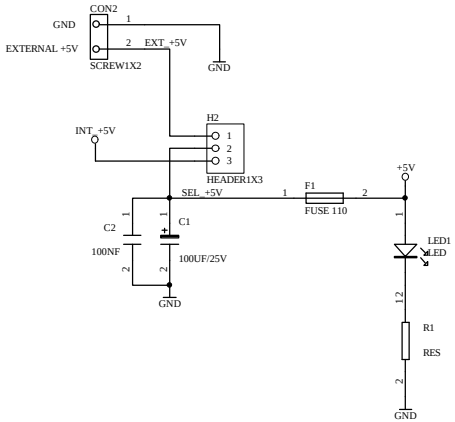


| Title | | |
|---|---|---|
| Size B | Number | Revision |
| Date: 5-Feb-2001 | Sheet of | |
| File: E:\PCB DESIGNS\Designs\43a4\PC43A4.sch | Drawn By: | |